OPERATING MANUAL OF SEMI-AUTOMATIC TRIPOD TURNSTILE CPW-311BS

V2.3

CMOLO INTERNATIONAL CO., LTD.

CONTENTS

1. Introduction

The Semi-Automatic Tripod Turnstile was developed to be robust, reliable and esthetically pleasing. Its rounded lines house a sturdy blocking mechanism designed for very low maintenance. The equipment is provided with a standard electric interface and is easily integrated into a system with write/read facilities such as magnetic card, bar code card, ID card and IC card. The product is of a series one and there are multiple types and specifications for your choice. It can be used widely in the sites requiring intelligent management for the passage such as hotel, school, factory, mine, underground and guest house, etc.

The Semi-Automatic tripod turnstile you purchased is researched and produced in accordance with CE quality management system and is a product having gone through strict and careful inspection.

The product is equipped with sophisticated technology. To ensure a safe and reliable operation and to ensure the safety operation, the operation manual is provided with special precautions for the operation of the system. It is recommended that the user read carefully the operation manual prior to application of the equipment, otherwise, your right may be infringed due to an improper application of the equipment.

This manual presents a detailed description of Semi-Automatic Tripod Turnstile operation and components. To get to know other CMOLO products, please visit our website at http://www.cmolo.com.

2. Safety Precautions

2.1 General safety notes

The Semi-Automatic Tripod Turnstile has been designed built and tested according to the latest technology. Although it has left the factory in a fully operational and safe condition, it is important that the installation is carried out correctly therefore the operating instructions must be read carefully and the safety notes must be observed.

Any liability and warranty is declined by the manufacturer in the case of incorrect use and use for purposes other than intended.

The electrical power used in this equipment is at a voltage high enough to endanger life. Before carrying out maintenance or repair, you must ensure that the equipment is isolated

from the electrical supply and tests made to verify that the isolation is complete.

Carefully read the instruction in this manual before assembling and installing the Semi-Automatic Tripod Turnstile. This will extend the life of the product and will enable you to fully benefit from all its features.

2.2 Safety notes

- Disconnect all external opening or closing devices (access control, control desk, etc.) during maintenance work
- It is prohibited to install the tripod turnstile without proper mounting to the foundation
- A main power switch or residual current operated device is compulsory
- Before commissioning make sure all electrical and functional features are tested
- The electrical wiring of the tripod turnstile must comply with the included drawings
- Only certified and trained electrical technicians may perform the electrical connections
- Only certified and trained electrical technicians may remove covers for mains plug mains receivers or wirings
- During maintenance work the fixing bolt must be checked and tighten, if necessary.
- Current carrying components like switching power supply, solenoids, resistors, stator housings of motors, lamps etc. shall not be touched while in operating temperature condition; this can cause skin burns
- During application of the product, it is forbidden to sit on or press with force on the barrier rod, otherwise, unnecessary damage may be caused to the tripod turnstile.
- It is recommended to use correctly the equipment interface regarding to the electric characteristic, otherwise, damage to the equipment and other equipment of the user may be resulted.
- The equipment is not equipped with explosion-proof design, and it is not allowed to apply the equipment to an environment with danger of inflammable or explosion. However, it is optional for the user to purchase products of other type for the purpose.

3. Product Description

3.1 Technical Details

1) The mechanism is locked until a valid open signal is received.
2) The system adopts the exclusive technique of double cam. As a result, the turnstile is more accurate and reliable for zero point locking and unlocking.
3) The entire system runs smoothly, with a small noise and free of mechanical impact.
4) Two or one direction can be controlled by switch- button and access controller.

5) All controls are housed within the unit, therefore no separate switches or control boxes are required.
6) It has failure self-detect and alarm indication function, facilitating maintenance and application for the users
7) Control of the tripod is achieved usually by an electro-mechanism mounted within the top section of the tripod turnstile and accessible by open the Top Cover. Purely mechanical control is also possible.
8) It is provided with multiple operation modes for selection. It can either read card in double way for flow limit, or reading card in a way while barring in the other, or read card in a way while free passage in the other. More over, the operation mode of turnstile may be set up with the built-in small keyboard.
9) It has automatic function of rod down when power off. Fail-safe or fail-lock functions: The mechanism will lock/unlock the barrier rod in one or both directions in the event of a power failure.
10) A positive action lock which prevents two passages at one time.
11) It has far end control function for down rod to meet the special requirements of the users and the fire control.
12) A self-centering mechanism which ensure complete rotation of the head to the reset position.
13) The equipment is provided with a unified, standard electric interface and is available to be integrated with various read/write facilities to facilitate the system integration. It is able to realize far end control and management with the help of administrative computer.
14) It is available to calculate automatically the number of personnel passing through the passage and to display directly in LED for the administrator, who can understand very clearly the personnel passing in a certain direction.
15) It has a clear and definite indication function for the passenger, and it is displayed directly and visually on LED with passing or barring indication for the passenger.
16) It has a function of reading card with or without memory, and it may be set up with the built-in small keyboard in accordance with the requirements of the users.
17) **Anti-Backup Mechanism:** An anti-backup device prevents reverse rotation when the tripod has moved 60° from the rest position.

3.2 Main Technical Specifications

1) Power voltage: AC100~240V, 50Hz
2) Operation environment temperature: －15℃ ～ 60℃
3) Relative humidity: less than 95% not condensed
4) Passage width: ≤600mm

5) Passing speed: 20-40 person/m
6) Main-board voltage: 24VDC
7) Max current: 3A
8) Working Environment: Indoor/Outdoor
9) Input port: dry contact signal; +12V level signal and pulse width > 100ms, DC12V pulse signal;
10) Communications port: RS232/RS485 electric standard, communications range: ≤1200m.

3.3 Equipment Definition

1) Leftward barrier: along passage way, barrier rod pointing to the left, as shown in Figure 1:

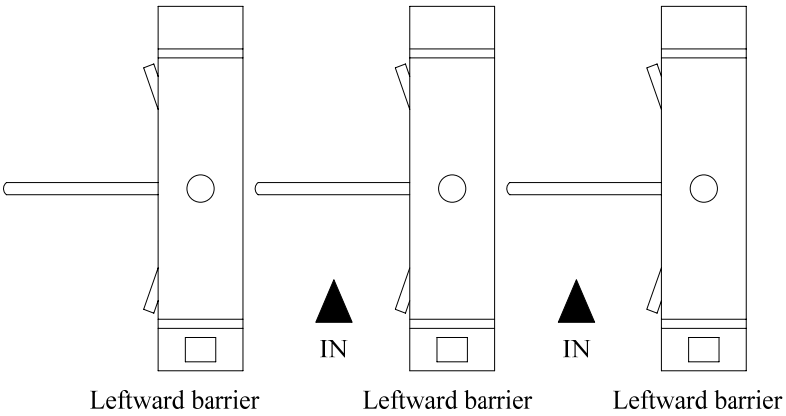

Figure 1

2) Rightward barrier: along passage way, barrier rod pointing to the right, as shown in Figure 2

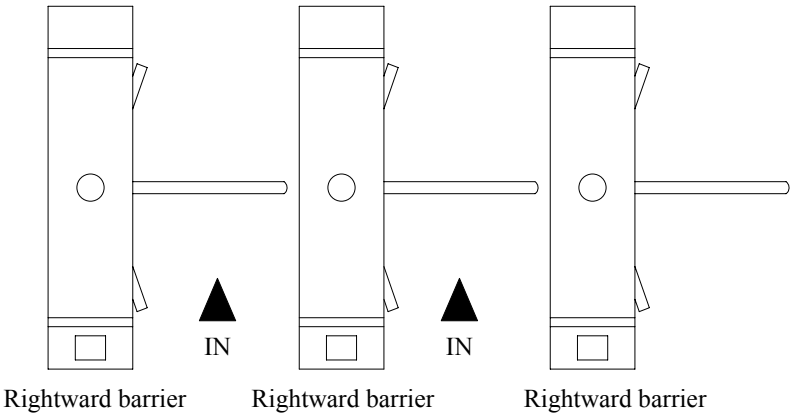

Figure 2

3) Double way barrier: available to pass in both directions, as shown in Figure 3:

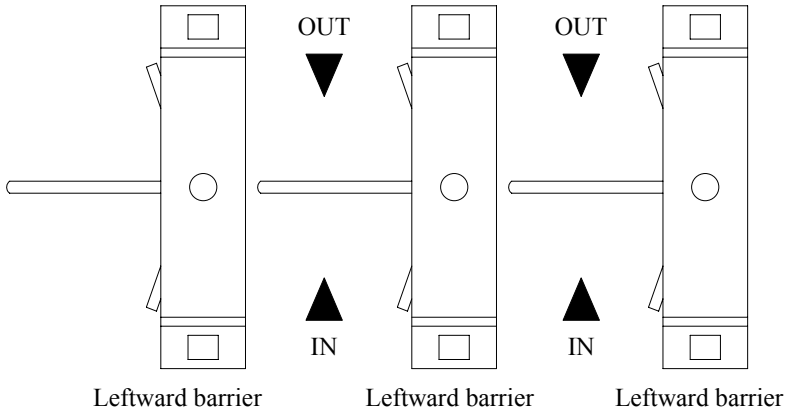

Figure 3

3.4 Equipment Outline Dimensions

Semi-Automatic Tripod Turnstile is with a complete set of types and specifications and can be divided into types as given below. Figure 4 shows the outline dimensions of CPW-311BS.

Besides, there are also different types and specifications depending on different read/write equipment installed.

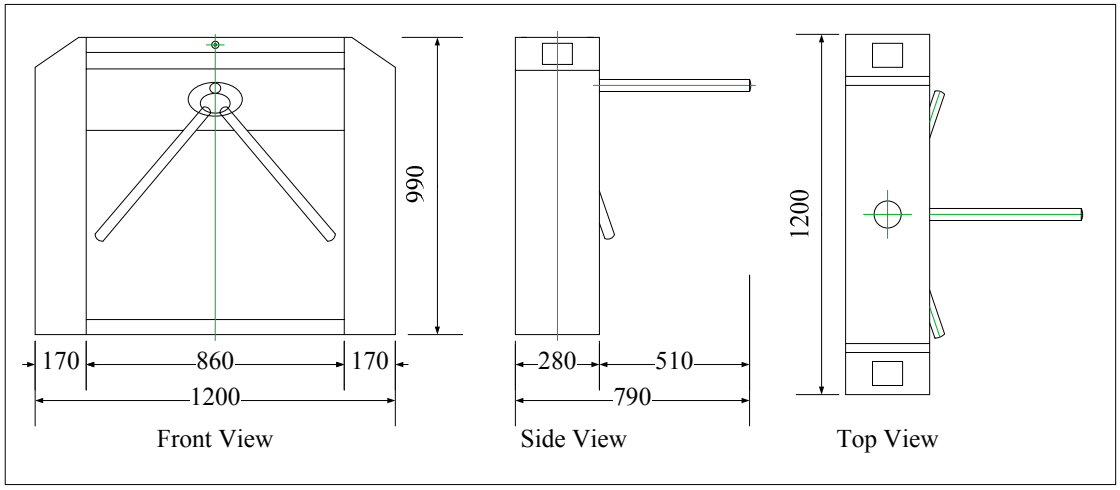

Figure 4

4. Equipment Composition and Basic Operation Principle

4.1 Equipment Composition:

The Semi-Automatic Tripod Turnstile mainly composed of stainless steel cabinet, core mechanism, main controller read/write system and barrier rod. As to the read/write system, it may be the system as provided by CMOLO, or the one chosen by the users themselves in accordance with their own requirements. The practical installation locations of read/write device and display vary as different types of turnstile. Figure 5 shows only the double way Semi-Automatic tripod turnstile CPW-311BS:

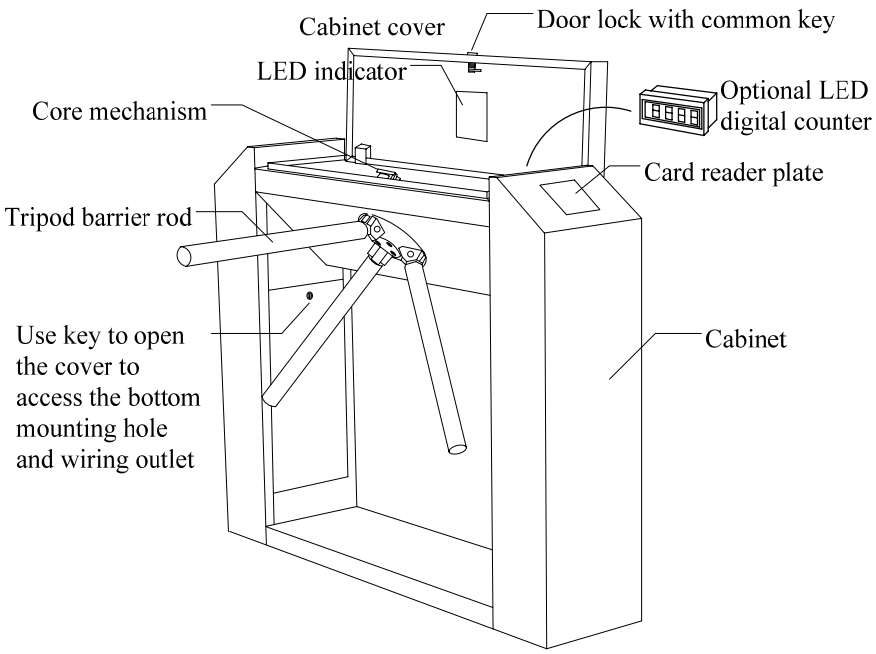

Figure 5

4.2 Basic Operation Principle

When go signal is given from the access control system or from a push-button, The main controller electrifies the electromagnet to unlock, and then, the barrier rod will move along the passing direction of the passenger as driven by passenger, passenger may pass through successfully along the passage direction. An anti-backup device prevents reverse rotation when the tripod has moved 60° from the rest position. Once the barrier rod rotates for 120°, the transmission system will lock automatically.

As to the read/write system such as magnetic card, bar code card and ID card are the same as that given above, except that the determination of legal card and the barrier open signal of turnstile main control board are carried out by the administrative computer.

4.3 Equipment Operation Mode

To facilitate the application of users, the equipment is set up with various operation modes as given below for selection by the users in the practical application:

1) Double way reading card, double way flow limit
2) One way reading card, the other way barring
3) One way reading card, the other way free passing

4.4 System Composition

The product can either be used independently to form a passage or be combined into

multiple passages of intelligent management, at the same time; it may be interconnected with management computer and fed back in real time the passing condition of the passage and the turnstile status to the administrator, forming various kinds of management report lists. The administrator may also carry out far end control of the operation for the turnstile through the management computer.

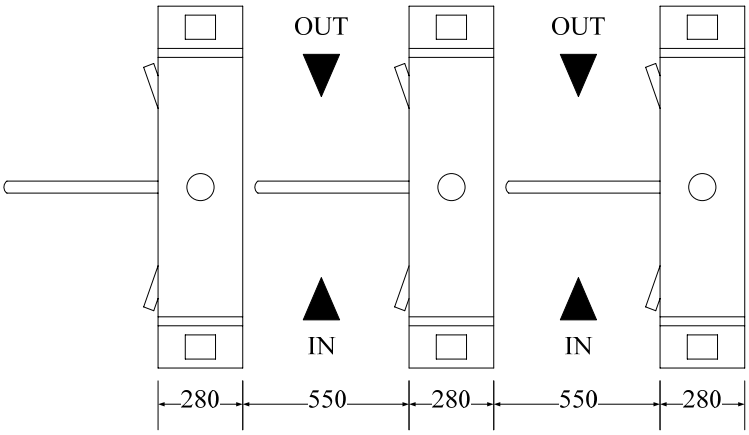

Figure 6

5. Equipment Assembly and Installation

5.1 Equipment Assembly

The assembly of the barrier rod: as shown in Figure7.

1) Put the barrier rod into the installation groove of the aluminum plate;
2) Put the dowel into the dowel hole of the aluminum plate;
3) Tightened the screw.

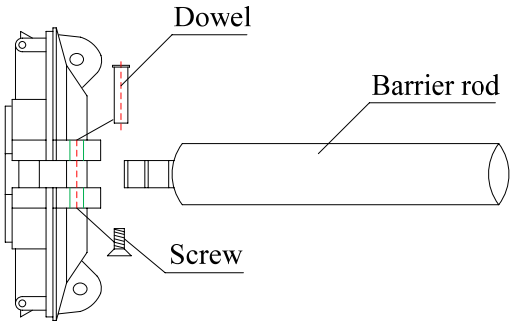

Figure 7

5.2 Equipment Installation

1) Sort out the auxiliaries in accordance with the packing list

2) Determine the installation location in accordance with the system composition, application site and the type of turnstile selected.

3) As shown in Figure 8 for the installation requirements, determine the installation hole

location, bury before hand at the installation location 4 M12 ground screw bolts or 4 M12 inflatable screw bolts, As shown in Figure 8

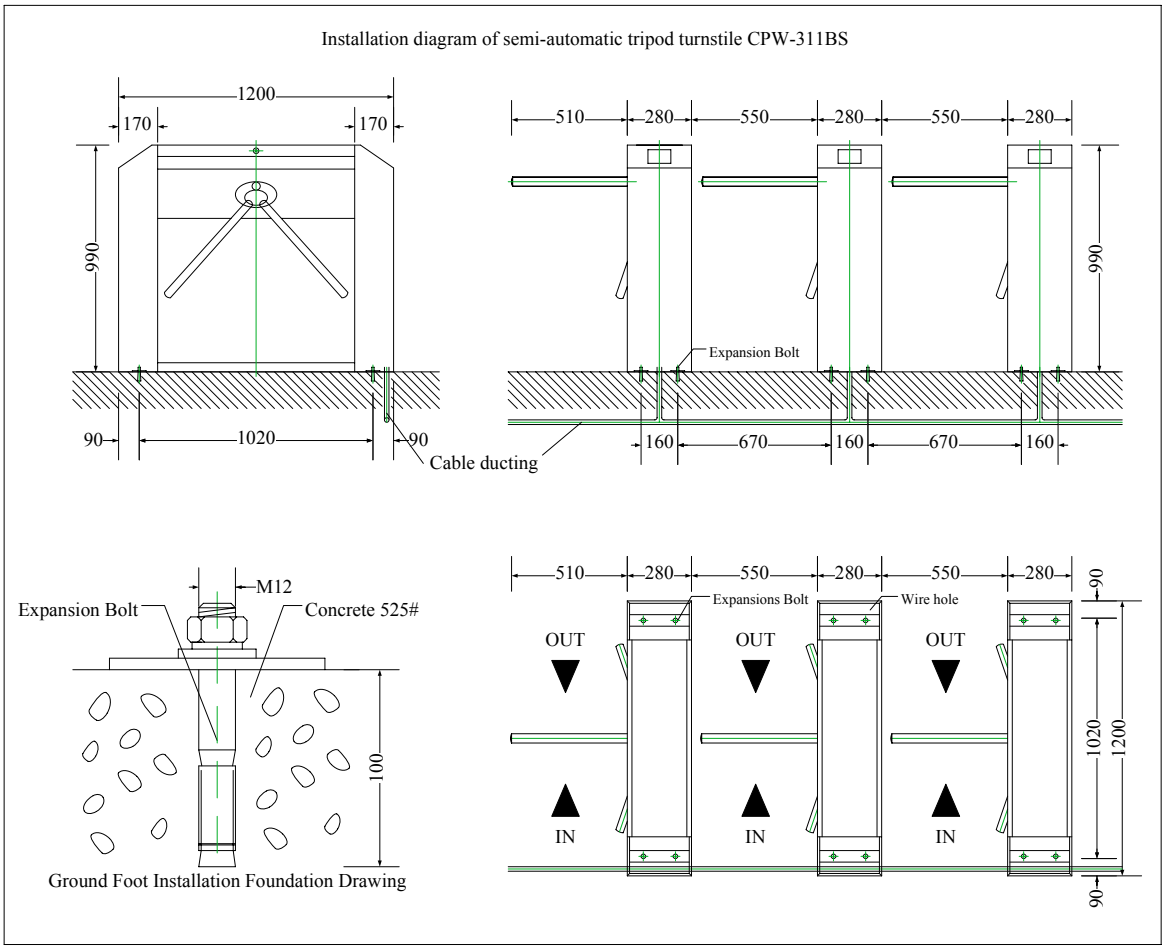

Figure 8

4) Sheath the strong power and weak power cables respectively with 3/4”PVC tube, and bury them to the corresponding positions with concrete.

5) Open cabinet door, align the hole for screw bolt at the chassis with the ground screw bolt, and tighten the nut.

6) As shown in the connecting diagram of the system (Attached Figure 6), connect the power line, control line to the connecting socket of the main controller board of the turnstile, and connect properly the protection ground wire.

PRECAUTIONS:

1) The depth of the PVC tubes buried shall be more than 60mm. The height above the ground shall be more than 50mm. And the exit of the PVC tube shall be bent return so as to avoid the water falls in.
2) All the operation above should be carried out under power off condition, and it should be ensured that the protection ground wire of the system is connected correctly,

properly and firmly.

3) In case the equipment selected is used outdoor, a concrete installation platform of a size of 100mm~200mm should be prepared for humidity-proof at the location for installation of the equipment. At the same time, rainproof facility such as sun shading plate should be installed above the equipment. It is forbidden to use the equipment directly at an exposed environment.

5.3 Equipment Functional Test

The operating procedure is shown below and given the sequence of passage through the turnstile in either direction. The barrier rod will normally be locked, unless a free entry/exit option has been specified operate the Access Control Device if fitted. On the acceptance of a signal from the Access Control Device the barrier rod will unlock and be free to rotate, pass through the passage, using your hand to push the barrier rod, the barrier rod will automatically lock in its new position.

The user may carry out one or several functional tests as given below in accordance with the requirements on the passage function of the turnstile.

5.3.1 Single time card reading passage:

When the passenger read an effective card, the main controller electrifies the electromagnet to unlock, and then, the barrier rod will move along the passing direction of the passenger as driven by passenger, passenger may pass through successfully along the passage direction. An anti-backup device prevents reverse rotation when the tripod has moved 60° from the rest position. Once the barrier rod rotates for 120°, the transmission system will lock automatically.

5.3.2 Card reading at one side and free passage at the other

The passage test on card reading terminal may be carried out in accordance with Section 5.3.1. As to the free passage direction, when the barrier rod is pushed slightly along the passing direction and the barrier rod will rotate toward the passing direction as driving by the passenger. As the barrier rod rotates to 120° , the transmission system will lock automatically.

5.3.3 Reset function

When the passenger read an effective card, the main controller electrifies the electromagnet to unlock. The equipment will reset automatically, cancel the passing right of the time and will not count, once no passenger passing at the stipulated time (set up by

the users, the default being 10s).

5.3.4 Function of rod down at power off

The barrier should be drop down when the power of the system is cut off

5.3.5 Function of free passage at power off (optional)

The barrier should be set free when the power of the system is cut off.

5.3.6 Far end control

The following setting and test should be carried out when the management computer is used for far end control of the barrier rod.

The turnstile should carry out the relative actions reliably when the upstream management software is used to carry out operations for the turnstile such as rod up/down, open barrier, counting value of read/reset counter. If not, it is necessary to check carefully the communications lines and connectors.

For detail operation method and contents, refer to Appendix A1.

6. Operation Instruction of the Equipment

Once the mechanical and electrical installation of the turnstile has been completed, it can be put into service.

Check before startup

6.1 The equipment can only be used after the above test to ensure a normal operation of the equipment.

6.2 It is forbidden for the passenger to push, lean or pull the barrier rod during the card reading or prior to the indicator changing into a green lamp. Otherwise, the normal operation of equipment may be affected.

6.3 It is forbidden to sit or press with force on the barrier rod when the equipment is not in use, otherwise, the turnstile may be damaged.

6.4 It is recommended that the equipment not be used directly in the exposed site, or in humidity or corrosive environment. Otherwise, the application life of equipment may be affected due to rain, humidity or corrosive subject (for application in outdoor,

rainproof facilities such as sun shading board should be used).

6.5 For passing, it is only needed for the passenger to push slightly the barrier rod and the equipment will then drive the barrier rod to move automatically. It is not allowed to push the barrier rod with strong force during the passing.

Precautions:

1) Please do not use the system when there is lightning, otherwise the turnstile may be damaged.
2) It is required to connect reliably the protection grounding of the system to avoid accident of personnel injury.

---

7. Regular Maintenance

7.1 The housing of the equipment is of a sub-polish stainless steel. It is required to clean regularly with soft cloth so as to keep a clean and polish surface. It is forbidden to clean the surface with a hard object; otherwise, the appearance may be affected. It is also forbidden to wash it with water, otherwise, short circuit may occur in the electric control system and the equipment may be damaged.

7.2 It is required to check regularly the connection of various movement sections of the equipment. Fasten timely the loose fasteners such as nut and screw; otherwise, turnstile failure may be resulted due to long term operation.

7.3 It is required to check regularly the protection grounding of the system to ensure a reliable connection.

7.4 It is required to check regularly the connectors and line connection points to ensure a reliable connection.

8 Common Failures and the Remedy

1) No indication for direction and counter, and not able to read card after power on.
The failure is due to power system. It is required to check carefully the 5A fuse in the main board of the equipment (refer to Attached Figure 5, Appendix A.2) for damage, and see if there exists any loose connector, and broken power line.

2) When powering on or in operation, the barrier rod may not be locked reliably.
The failure is mainly due to rod off electromagnet being damaged or with broken line or loose

connection, or the spring being broken.

3) Not available to read card normally.
The failure is mainly due to a loose connection between reading device and the main controller or the reading device may be damaged. Replace the reading device and carry out functional test for it

Appendix A

A.1 Software manual

Login

Click the Project2_eng.exe, it will open up the Login windows, as follows in attached figure 1:

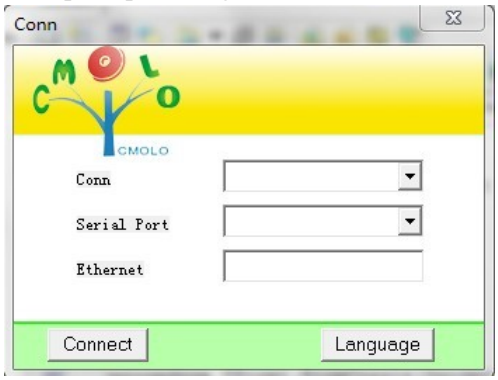

Attached Figure 1

After login, it will show the main window, as follows:

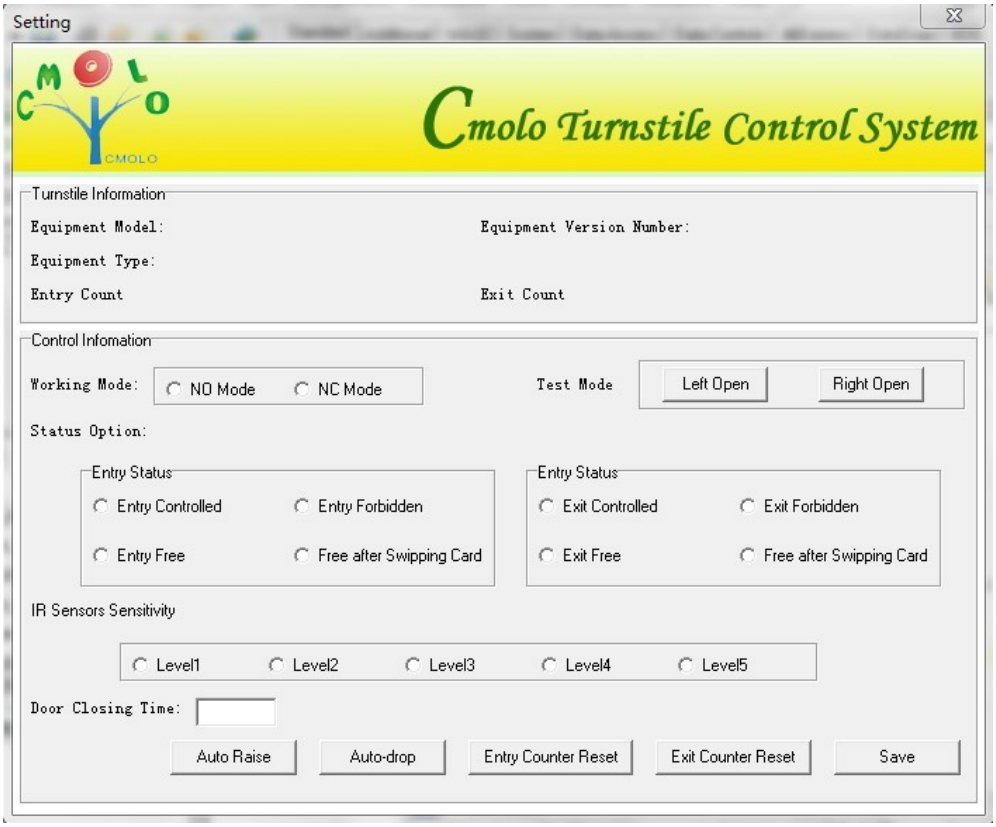

Attached Figure 2

System setting

Control information

1) Working mode setting (for optical turnstile):
   - NO mode: normal open, gate stay in open state, if passenger sign-in/sign0out successfully; gate will be closed and sound alarm if passengers get into the gate area without sign-in/sign-out.
   - NC mode: normal close, gate stay in close state, gate will open if passenger sign-in/sign-out successfully; gate will return to close state after passenger pass through or timeout.
2) Motor speed options: to adjust the speed of operation of the optical turnstile motor.
3) Status options: to set up operation mode for passage entry and exit.
   - Entry/exit controlled: entry/exit direction controlled by push button and access controller, passenger pass through with sign-in/sign-out or press push button.
   - Entry/exit forbidden: entry/exit way barring.
   - Entry/exit free: gate in free mode, let passenger pass through freely without sign-in/sign-out.
4) Door closing time: setting the max time for each passenger entering the passage. The value effective range is 1-60, unit is second. Default: 5
5) Auto-raise: automatic function of rod up.
6) Auto-up: automatic function of rod down.
7) Entry counter reset: clear entry counting value.
8) Exit counter reset: clear exit counting value.
9) Save: confirm and save setting.

A.2 Relative remarks

1) The stipulation of the right/left direction described in the appendix is that the left side is the left direction and the right side is the right direction when facing the turnstile (as given in the attached figure 3).

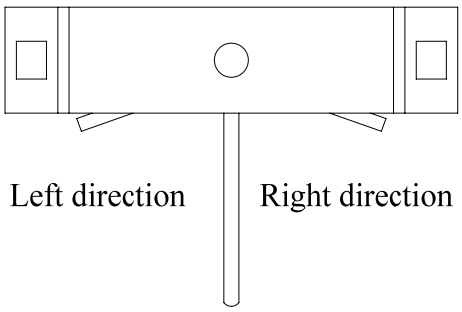

Attached Figure 3

2) The main controller function setting device push key, LED and fuse are located at the soldering face of the main controller board as shown in the attached figure 4.

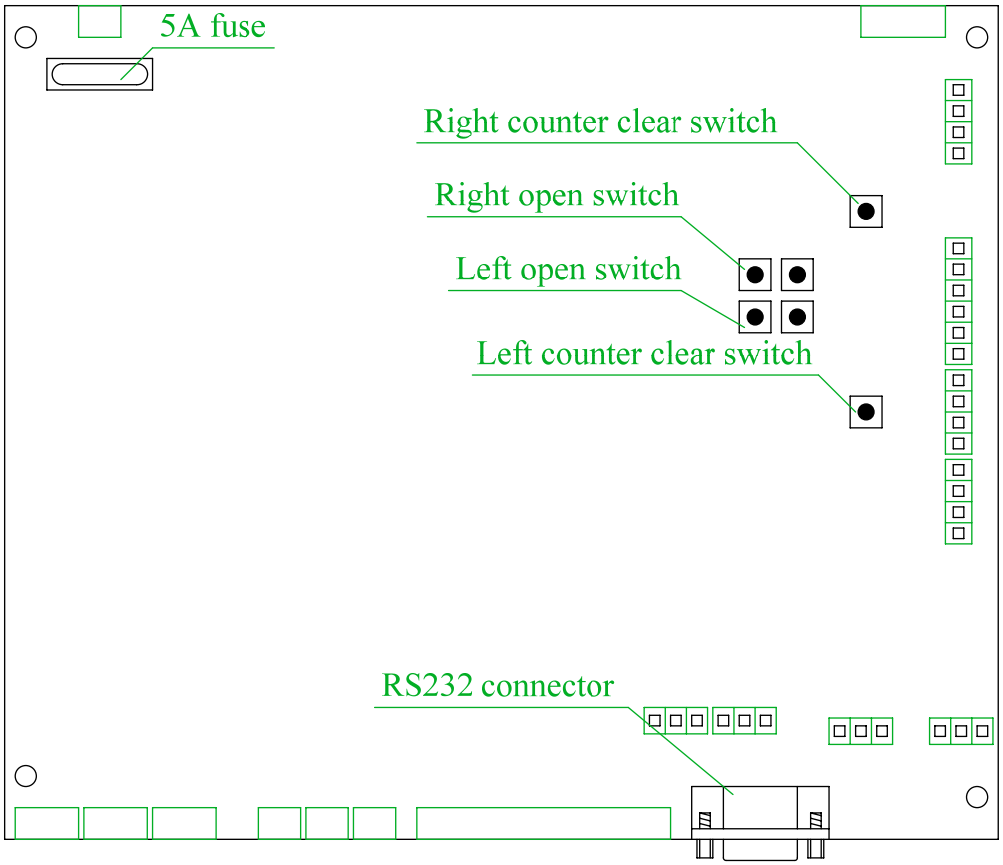

Attached Figure 4

Appendix B

Connection diagram of Semi-Automatic Tripod Turnstile (for dry contact signal)

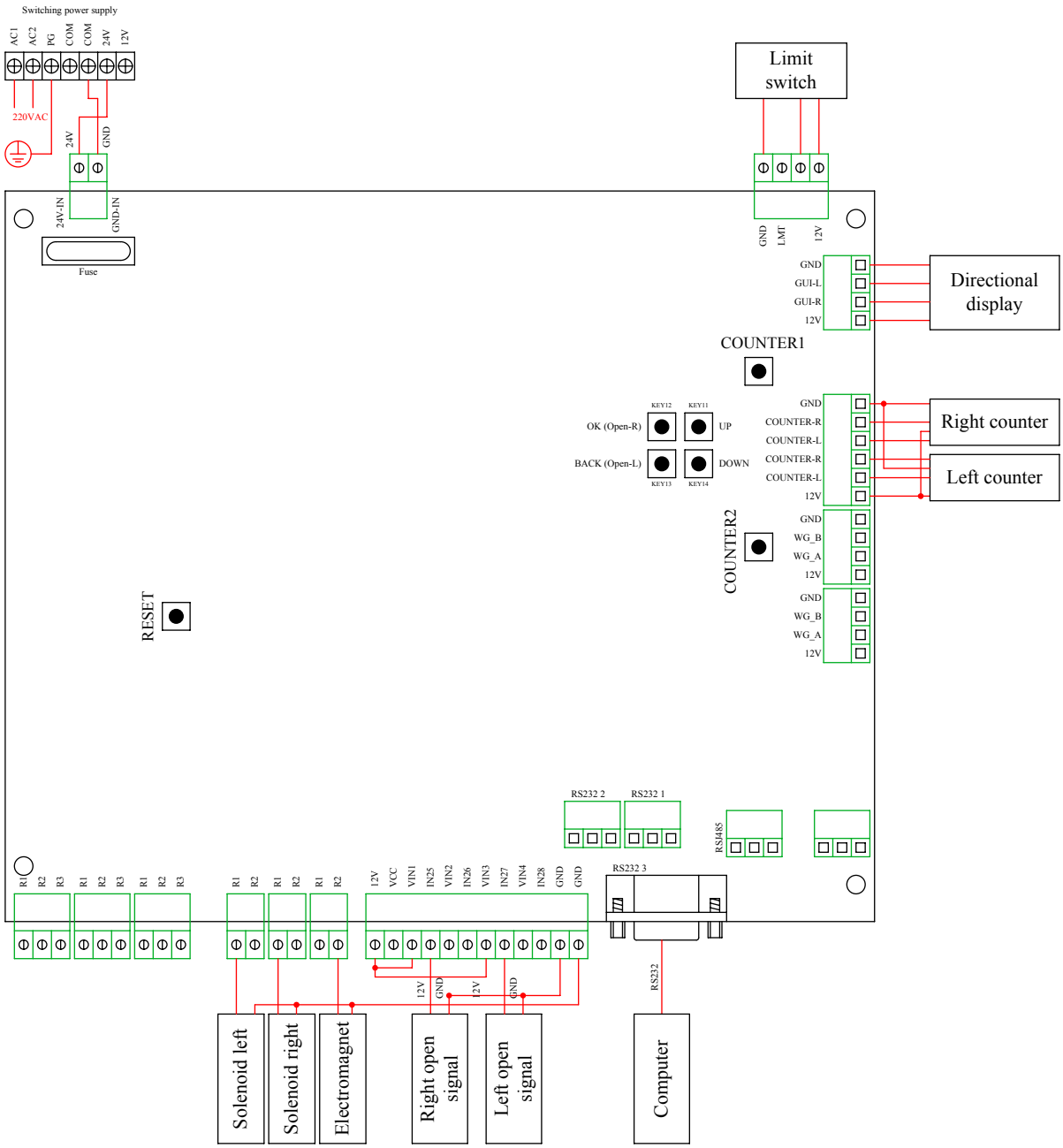

Attached Figure 6

Appendix C

CMOLO Turnstile Control Board

Communication Protocol Specifications

1. Communication between control board & PC

The control board is communicating with PC via RS232 protocol which requires an RS232 cable to connect with PC.

1.1 Initialization & reading control board parameters

PC sends the communication request command (0x02 0xFF 0x00 0x04) to the control board. After the control board receives the request, it returns to PC with the communication success signal (0x02 0xFF 0x00 0x04) repeatedly until PC sends the return signal (0x02 0x44 0x00 0x04). The repetition times are 5. If receiving the return signal fails, then it returns the failure signal (0x02 0xF4 0x00 0x04). After receiving the return signal successfully, the control board starts to send relative parameters. The control board sends each one parameter waiting for the PC to return the signal (0x02 0x44 0x00 0x04) and then sends the next parameter. If it doesn't receive any return signal, it will send the current parameter again. The repetition times are 5. The parameter is sent in the following sequence:

1) Equipment Model Number
2) Software Version Number
3) Equipment ID Number
4) Turnstile Working Mode
5) Working Mode of Entry & Exit
6) Door Closing Delay
7) Door Opening & Closing Speed (inapplicable to tripod turnstiles)
8) Entry Counting
9) Exit Counting
10) IR Sensors' Sensitivity (inapplicable to tripod turnstiles)

For detailed corresponding command formats, please refer to 2. Control Board Sending Command. Below is the flow Chart:

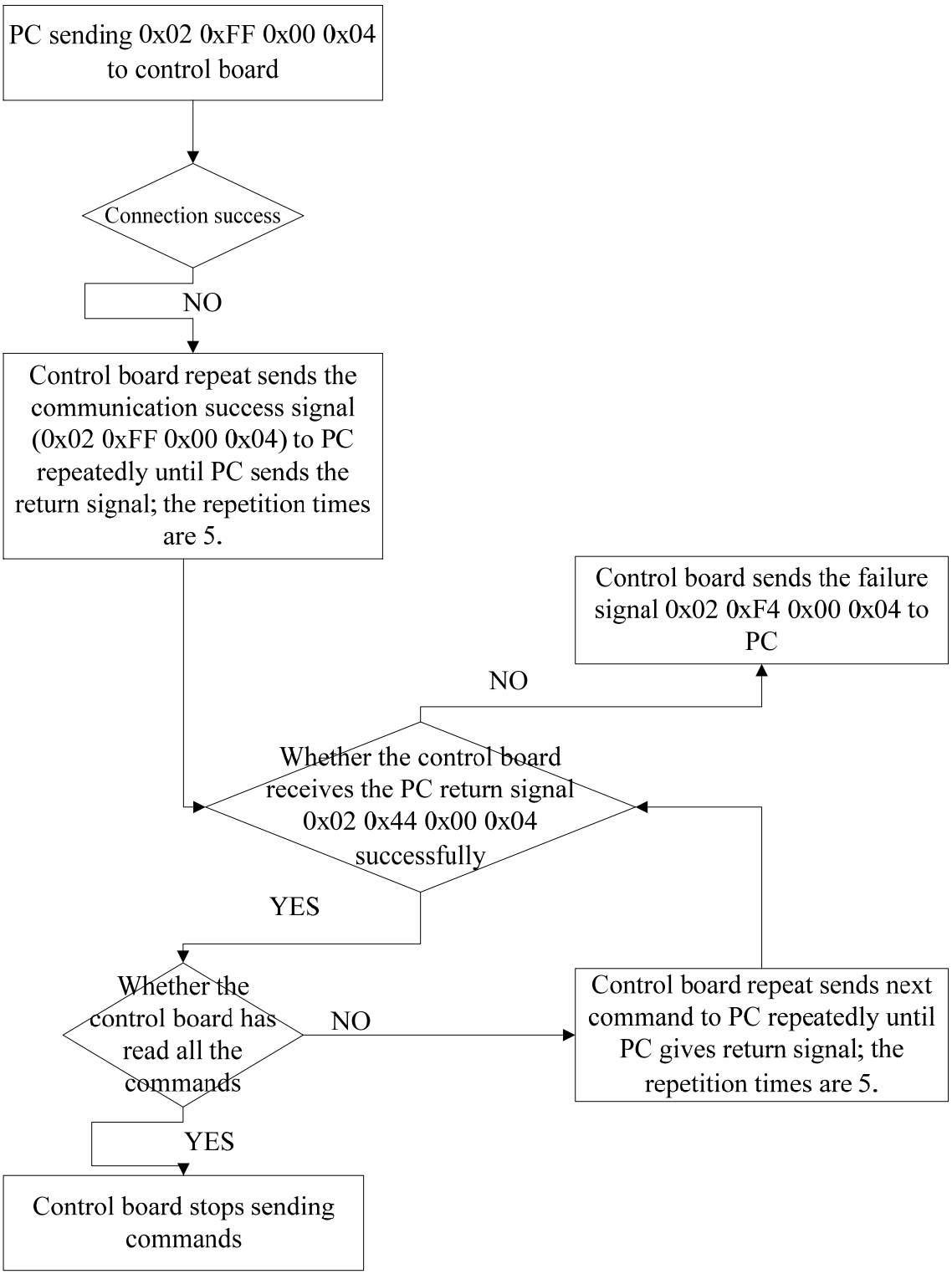

1.2 Setting control board parameters via PC

After PC connects with control board successfully, corresponding commands can be sent to the control board to set the parameters. The control board will send success return signal (0x02 0x44 0x00 0x04) to PC if the setting is successful, or the control board will send failure return signal (0x02 0xF4 0x00 0x04).

The control board is now available for PC to set the following parameters:

1) Turnstile Working Mode
2) Working Mode of Entry & Exit
3) Door Closing Delay
4) Door Opening & Closing Speed (inapplicable to tripod turnstiles)
5) Entry & Exit Counter Reset
6) Entry & Exit Counter Switch
7) IR Sensors' Sensitivity (inapplicable to tripod turnstiles)
8) Auto-Drop & Raise (only applicable to fully automatic tripod turnstiles)

For detailed command formats, please refer to 3. Control Board Receiving Command. Below is the flow Chart:

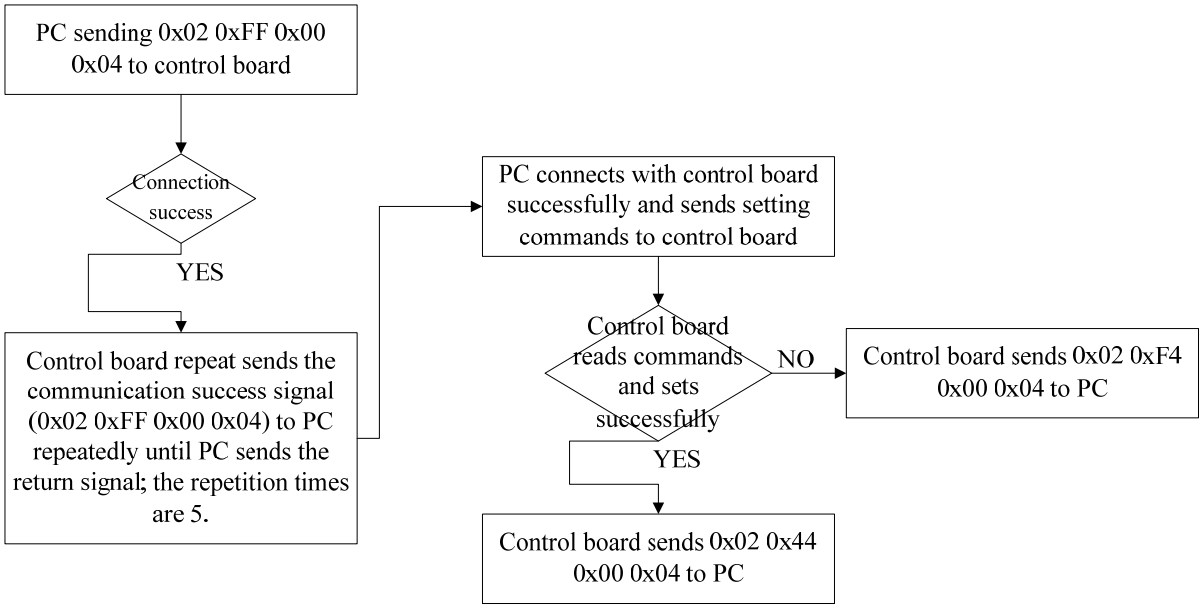

2. Control Board Sending Command

Control Board Sending Command Format

Command Start Symbol	Command Type	Command Length	Command Content	Command End Symbol	Command Descriptions
	0xFF	0x00	NULL		Connection success return signal
	0x44	0x00	NULL		Receiving command success return signal
	0xF4	0x00	NULL		Receiving command failure return signal
	0xF1	Command	Equipment Model ASCII Code		Equipment model

0x02		Content Length (unit: word)			0x04	name
	0xF2		Software Version ASCII Code			Software Version Number
	0xF8		Equipment ID ASCII Code			Equipment ID Number
	0x21		Entry Counting ASCII Code			Entry Counting
	0x22		Exit Counting ASCII Code			Exit Counting
	0x24		Equipment Type ASCII Code			Exit Counting
	0x41	0x01	0x30-0x33			Corresponding working mode to command content: 0x30：NO Mode 0x31：NC Mode 0x32：Entry Open (Test Mode); 0x33：Exit Open (Test Mode);
	0x14	0x02	0x30-0x33	0x30-0x33		Working mode of entry & exit, the first word shows entry status, the second word shows exit status. 0x30：Controlled Mode; 0x31：Free Passing Mode; 0x32：Forbidden Passing; 0x33：Barrier-free passing after swiping card
	0x18	0x03	0x30-0x39	0x30-0x39	0x30-0x39	Door closing delay time (0-999 seconds) The first word: the ASCII code for the hundred digit of delay time; The second word: the ASCII code for the tens digit of delay time; The third word: the ASCII code for the units digit of delay time;
	0x42	0x01	0x31-0x37			ASCII code of the door opening & closing speed ranking (1-7) (inapplicable to tripod turnstiles)
	0x81	0x01	0x31-0x35			ASCII code of the IR sensors' sensitivity ranking (1-5) (inapplicable to tripod turnstiles)

3. Control Board Receiving Command

Control Board receiving Command Format

Command Start Symbol	Command Type	Command Length	Command Content			Command End Symbol	Command Descriptions
0x02	0xFF	0x00	NULL			0x04	Connecting control board request
	0x44	0x00	NULL				Reading command success return signal
	0x41	0x01	0x30-0x33				Setting equipment working mode: 0x30：NO Mode; 0x31：NC Mode; 0x32 ： Entry Open (Test Mode); 0x33：Exit Open (Test Mode);
	0x14	0x02	0x30-0x33	0x30-0x33			Setting working mode of entry & exit, the first word shows setting entry working mode, the second word shows setting exit working mode. 0x30：Controlled Mode; 0x31：Free Passing Mode; 0x32：Forbidden Passing; 0x33 ： Barrier-free passing after swiping card
	0x18	0x03	0x30-0x39	0x30-0x39	0x30-0x39		Setting door closing delay time (0-60 seconds) The first word: the ASCII code for the hundred digit of delay time; The second word: the ASCII code for the tens digit of delay time; The third word: the ASCII code for the units digit of delay time;
	0x21	0x01	0x30-0x33				Entry & exit counter switch setting: 0x30：entry counter on; 0x31：entry counter off; 0x32：exit counter on;； 0x33：exit counter off;

	0x22	0x01	0x30-0x31			Counter Reset: 0x30：entry counter reset； 0x31：exit counter reset；
	0x24	0x01	0x30-0x31			Setting tripod turnstile auto-drop & raise (only applicable to fully automatic tripod turnstiles): 0x30：auto-drop; 0x31：auto-raise
	0x28	0x01	0x30-0x31			Reading entry & exit counting: 0x30: reading entry counting; 0x31: reading exit counting; After receiving the command, the control board will send the corresponding counting (see the sending command format table)
	0x42	0x01	0x31-0x37			Setting the door opening & closing speed ranking (1-7) 0x31-0x37: ASCII code of 1-7 (inapplicable to tripod turnstiles)
	0x81	0x01	0x31-0x35			Setting the IR sensors' sensitivity ranking (1-5) 0x31-0x35: ASCII code of 1-5 (inapplicable to tripod turnstiles)
	0x82	0x02	0x31-0x32	0x31-0x35		Control LED panel, after receiving this command, control panel will control LED panel to display, and then return to the feedback command. The first word refers to LED panel address: 0x31: LED panel 1 0x32: LED panel 2 The second word refers to the image which LED panel displays: 0x31: prohibition 0x32: pass by upper left arrow

						0x33: pass by bottom left arrow 0x34: pass by upper right arrow 0x35: pass by bottom right arrow
	0x84	0x02	0x31-0x32	0x31-0x35		Set the default display image of LED panel on both sides. After receiving this command, the control panel will set the display image of LED panel on both sides according to the command contents, and then return to the feedback command. The first word refers to LED panel address: 0x31: LED panel 1 0x32: LED panel 2 The second word refers to image which LED panel displays: 0x31: prohibition 0x32: pass by upper left arrow 0x33: pass by bottom left arrow 0x34: pass by upper right arrow 0x35: pass by bottom right arrow